iFiRE®
WE SPARK YOUR PROJECT

INBOUWBOX: iBiObox DOORKIJK

XS - Vlak
Afmeting: 870mm x 557mm x H650mm

S - Vlak
Afmeting: 1064mm x 557mm x H650mm

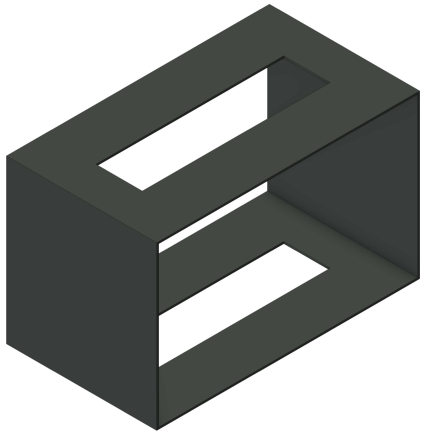

M - Vlak
Afmeting: 1214mm x 557mm x H650mm

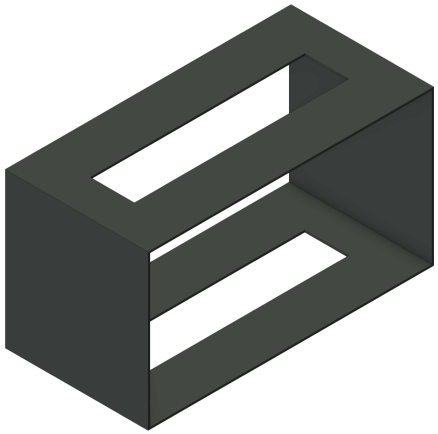

L - Vlak
Afmeting: 1524mm x 557mm x H650mm

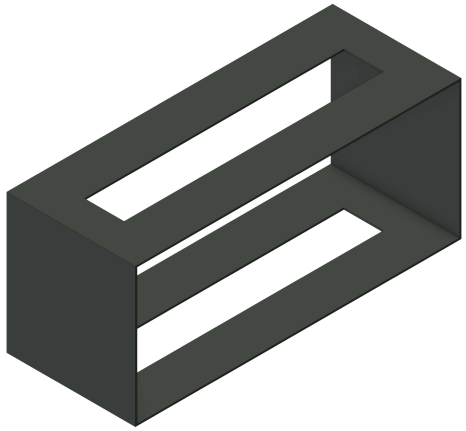

XS - Geribd
Afmeting: 870mm x 557mm x H650mm

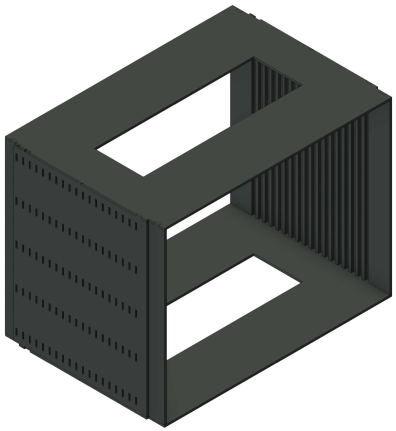

S - Geribd
Afmeting: 1064mm x 557mm x H650mm

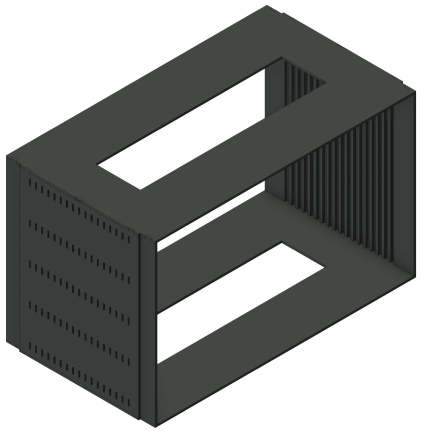

M - Geribd
Afmeting: 1214mm x 557mm x H650mm

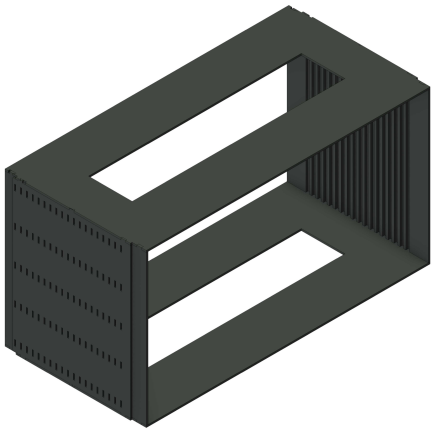
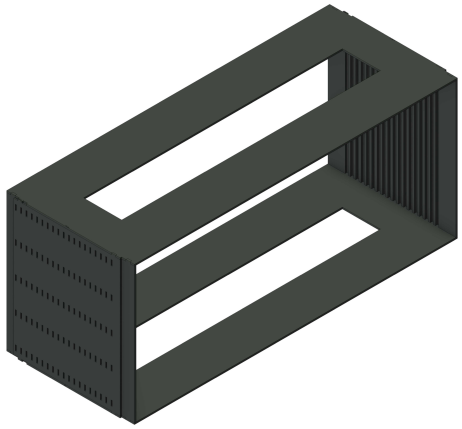
L - Geribd
Afmeting: 1524mm x 557mm x H650mm