iFiRE®
WE SPARK YOUR PROJECT

# INBOUWBOX: iBiObox FRONTAAL

## XS - Vlak
Afmeting: 870mm x 557mm x H650mm

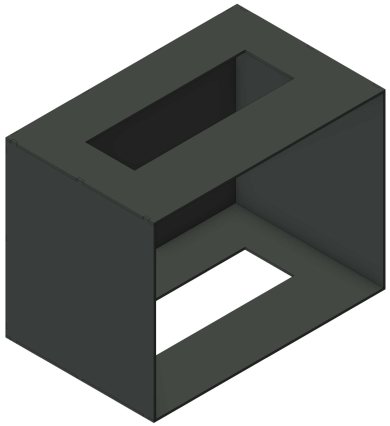

## S - Vlak
Afmeting: 1064mm x 557mm x H650mm

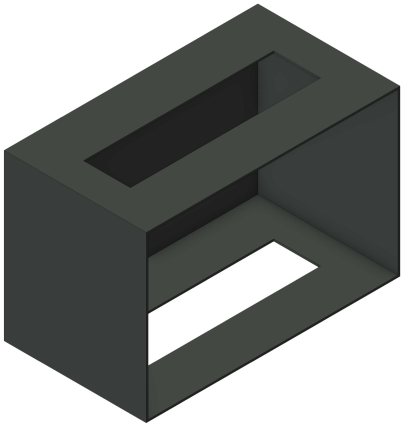

## M - Vlak
Afmeting: 1214mm x 557mm x H650mm

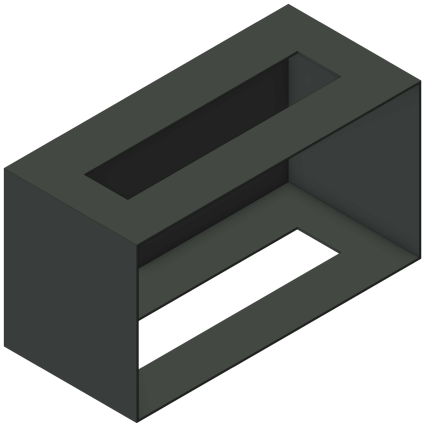

## L - Vlak
Afmeting: 1524mm x 557mm x H650mm

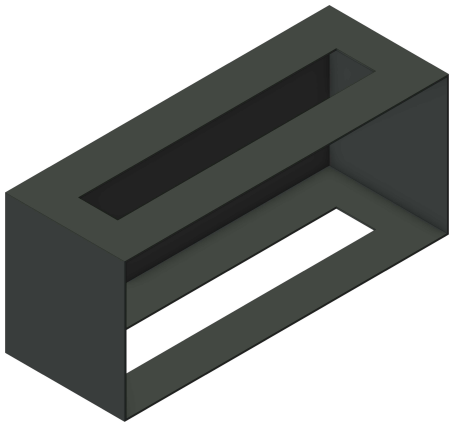

## XS - Geribd
Afmeting: 870mm x 557mm x H650mm

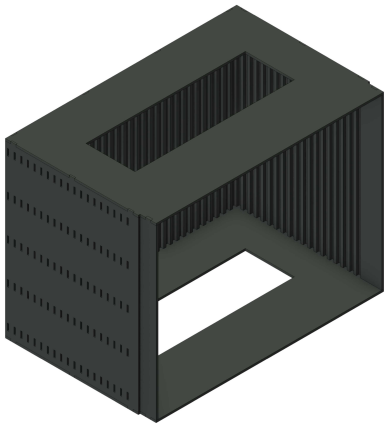

## S - Geribd
Afmeting: 1064mm x 557mm x H650mm

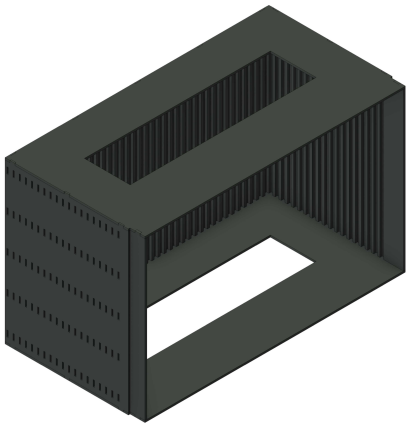

## M - Geribd
Afmeting: 1214mm x 557mm x H650mm

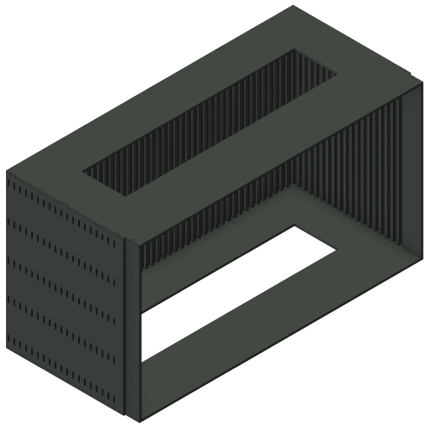
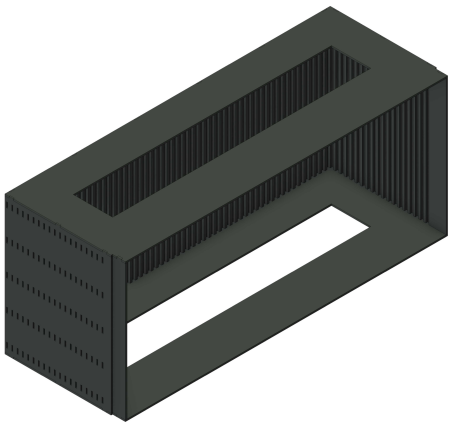
## L - Geribd
Afmeting: 1524mm x 557mm x H650mm